Turning-holder style

UBT-T1

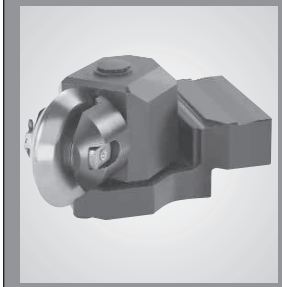

FOR BURNISHING OUTSIDE DIAMETERS, FACES, TAPERS, AND CONTOURS

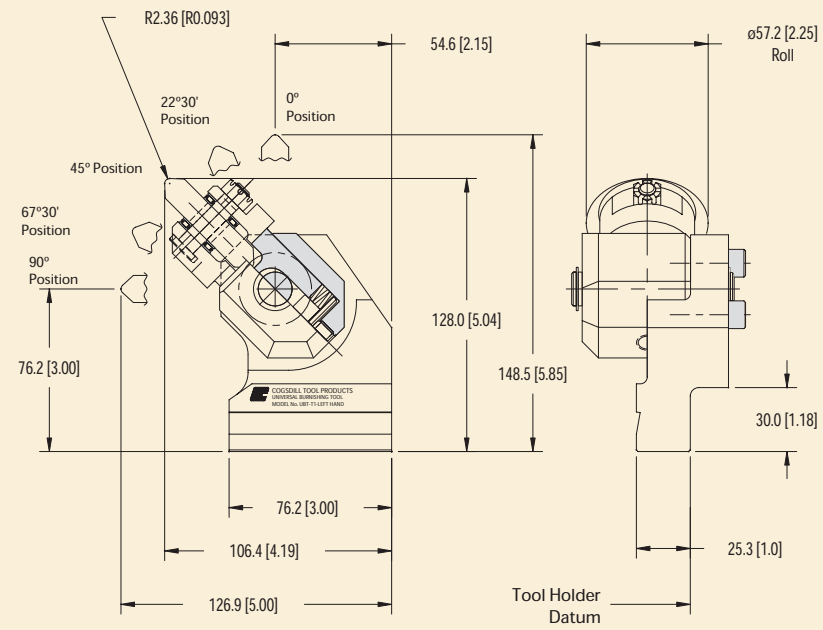

LEFT HAND

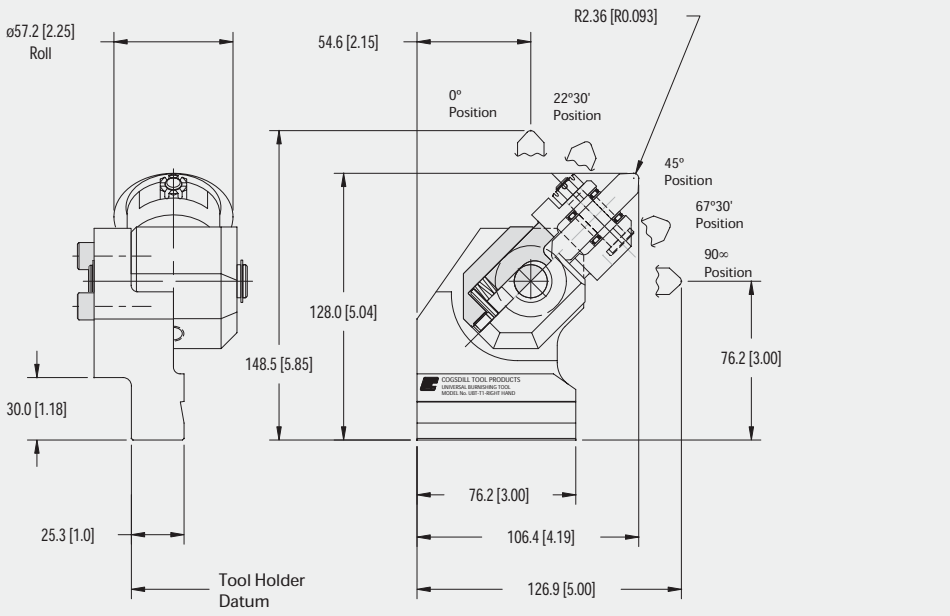

RIGHT HAND